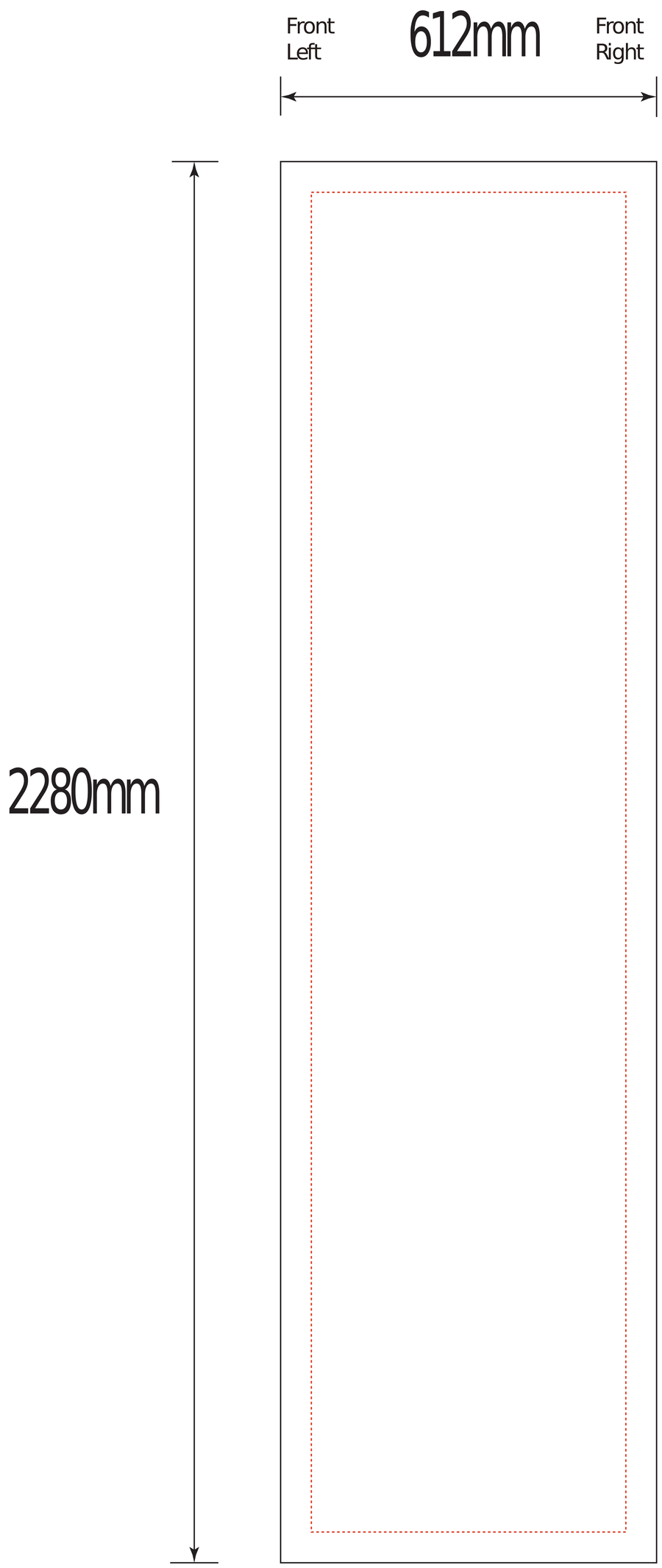
Front
Left
612mm
Front
Right
2280mm

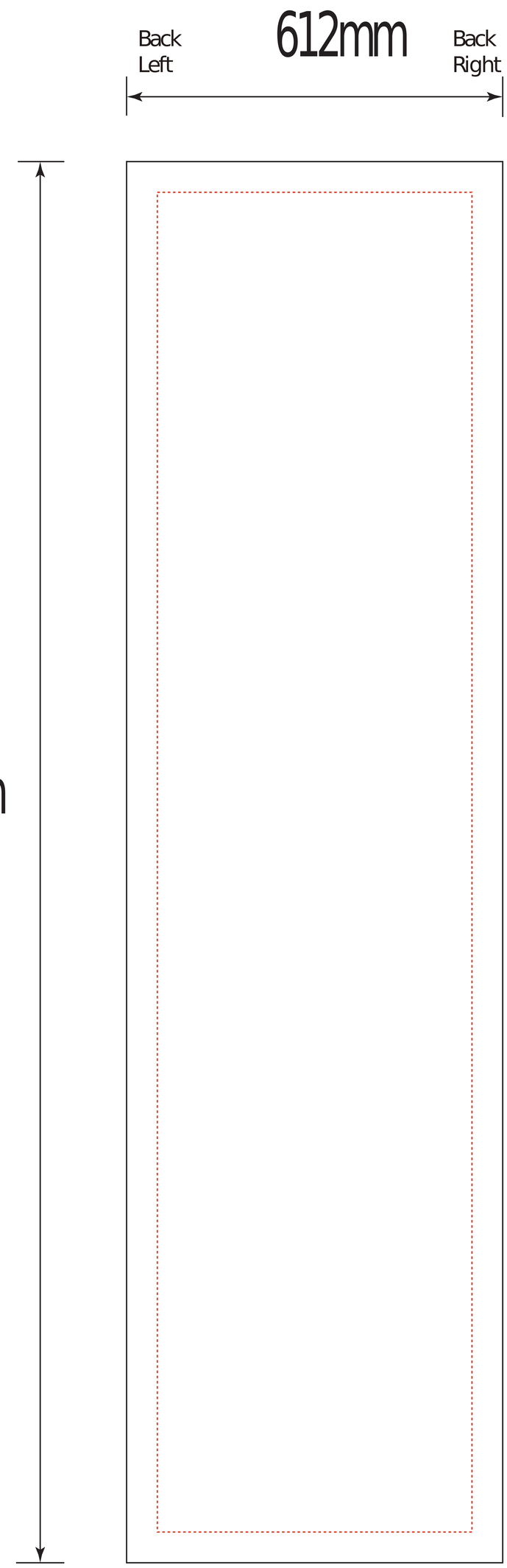
Back
Left
612mm
Back
Right
2280mm

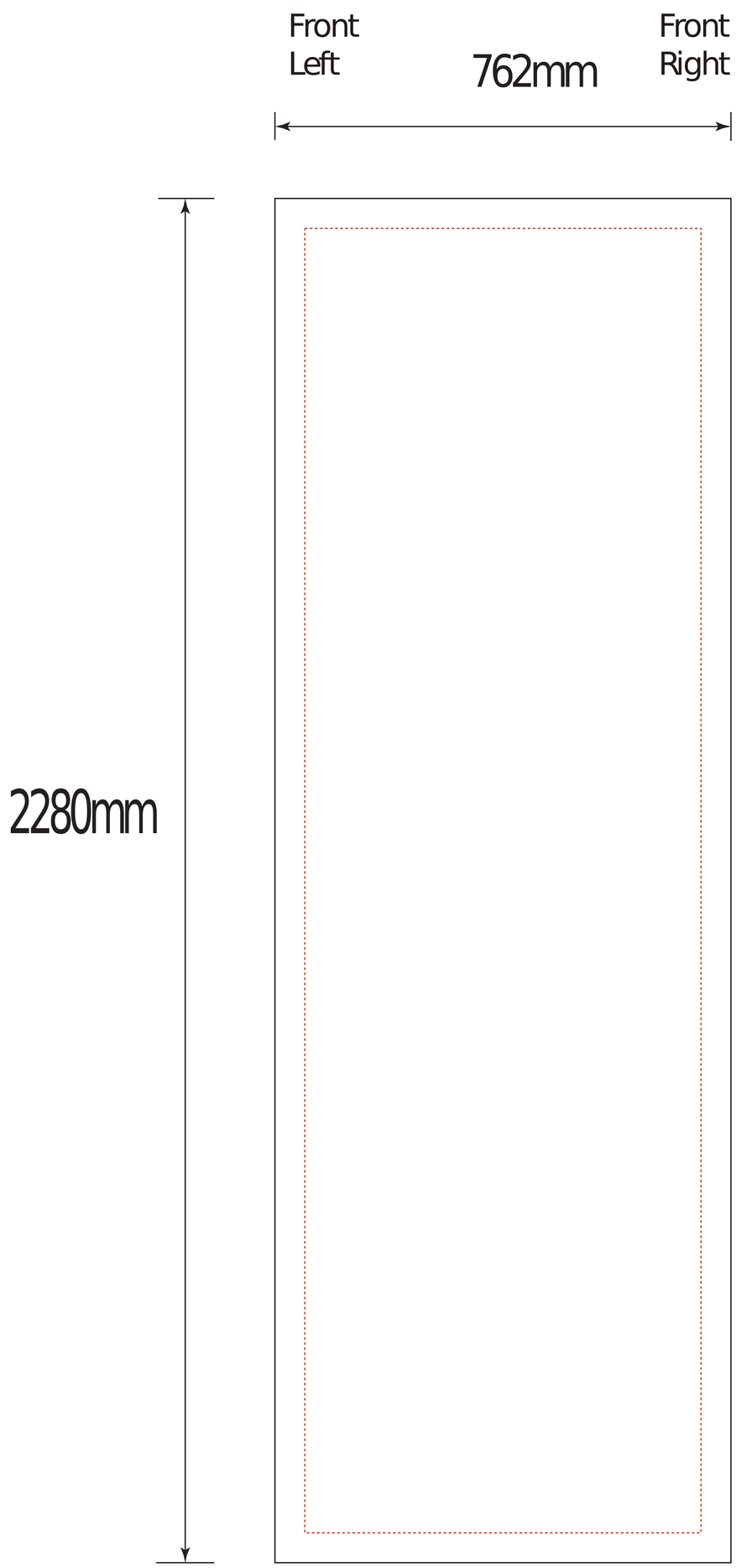
Front
Left
762mm
Front
Right
2280mm

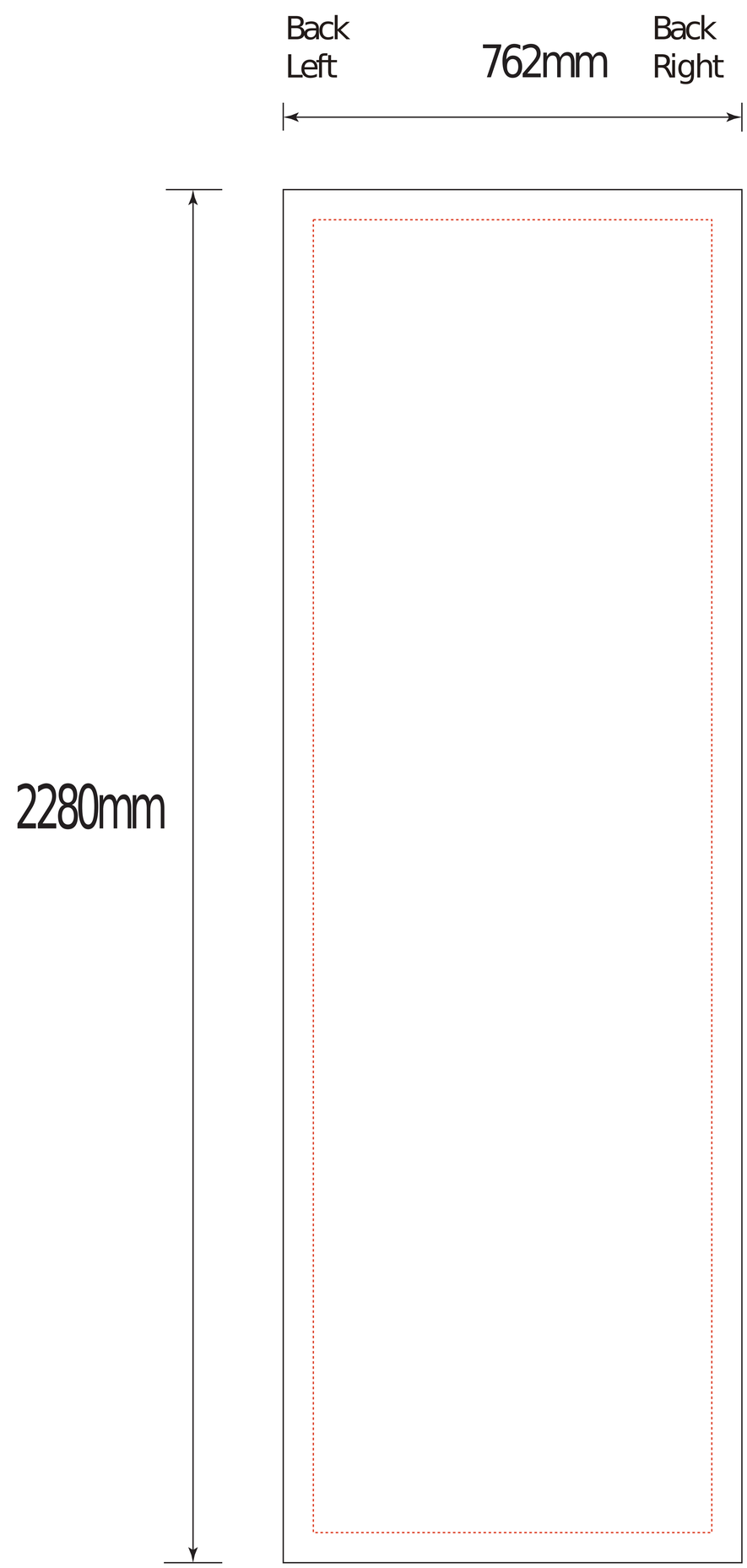
Back
Left
762mm
Back
Right
2280mm

Front Left

917mm

Front Right

2280mm

Back Left

917mm

Back Right

2280mm

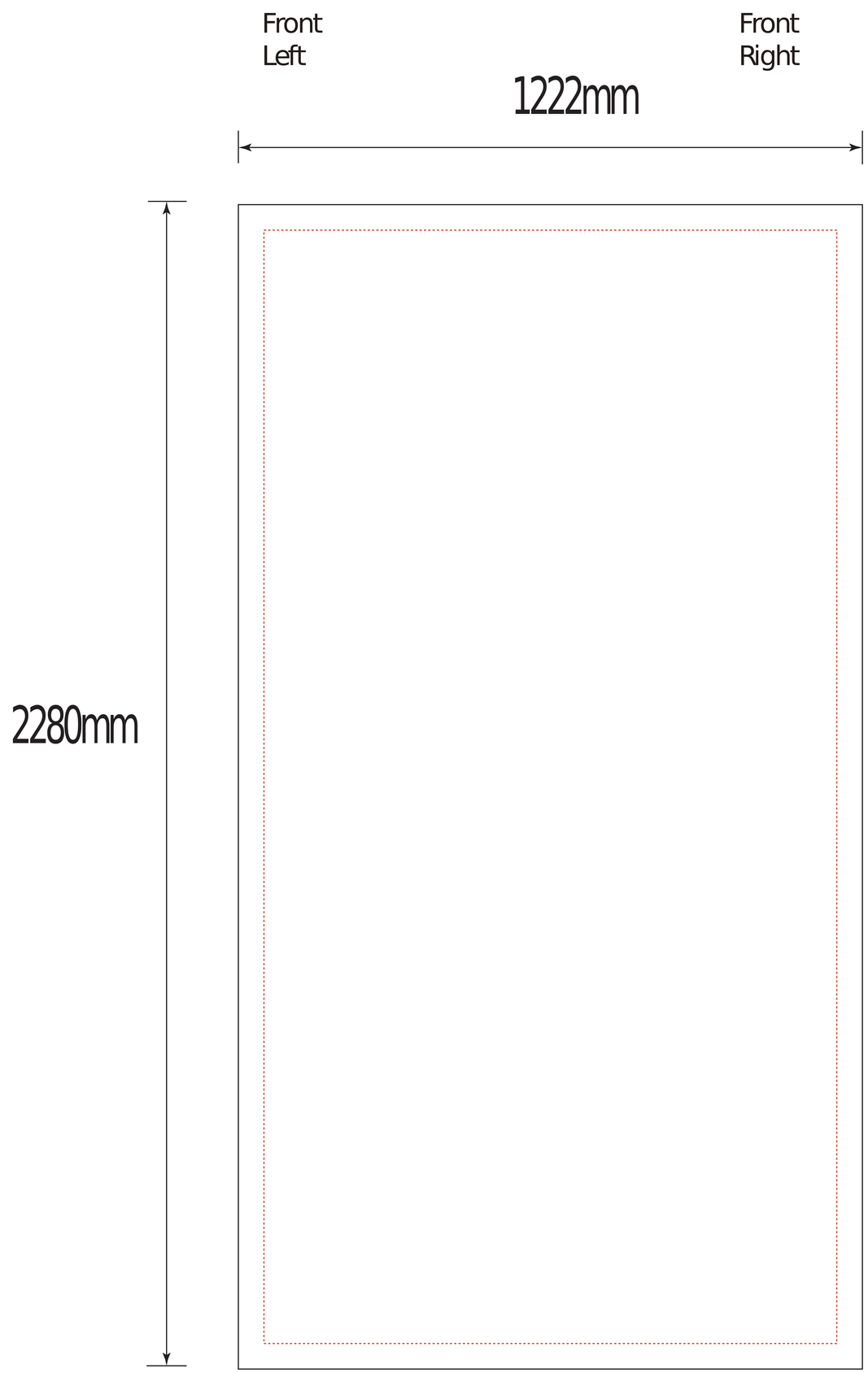
Front
Left
Front
Right
1222mm
2280mm

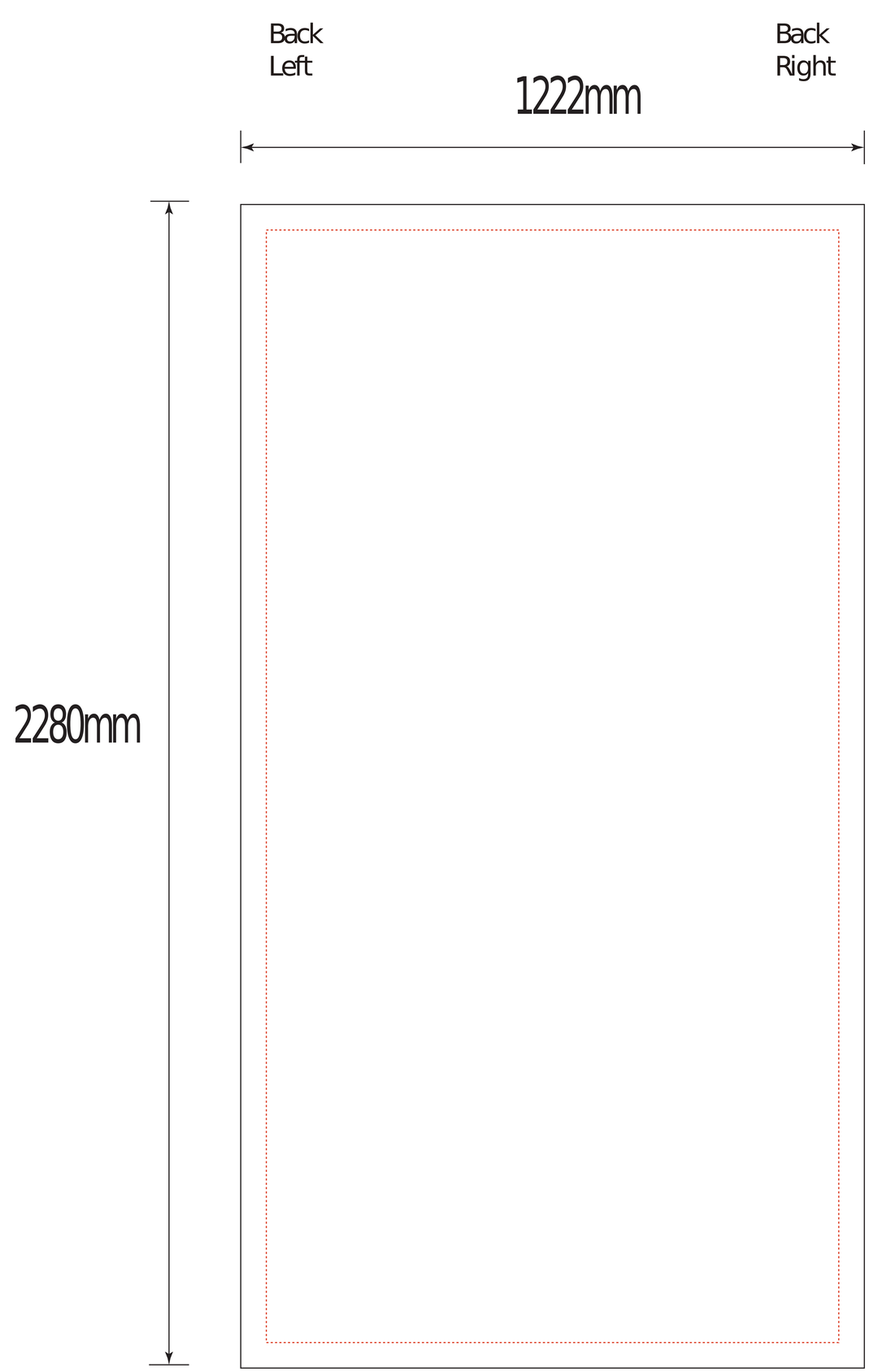
Back
Left
Back
Right
1222mm
2280mm

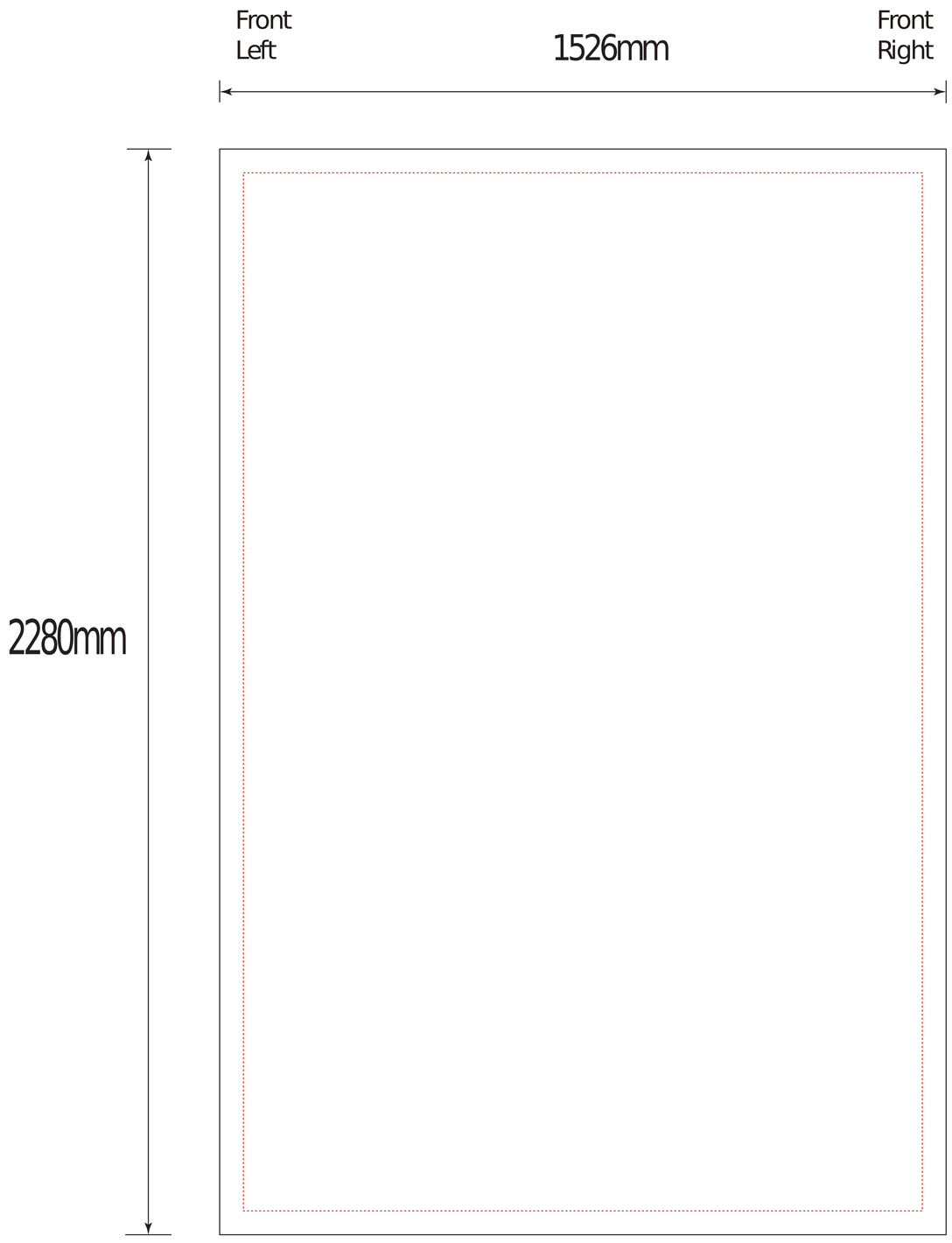
Front
Left
1526mm
Front
Right
2280mm

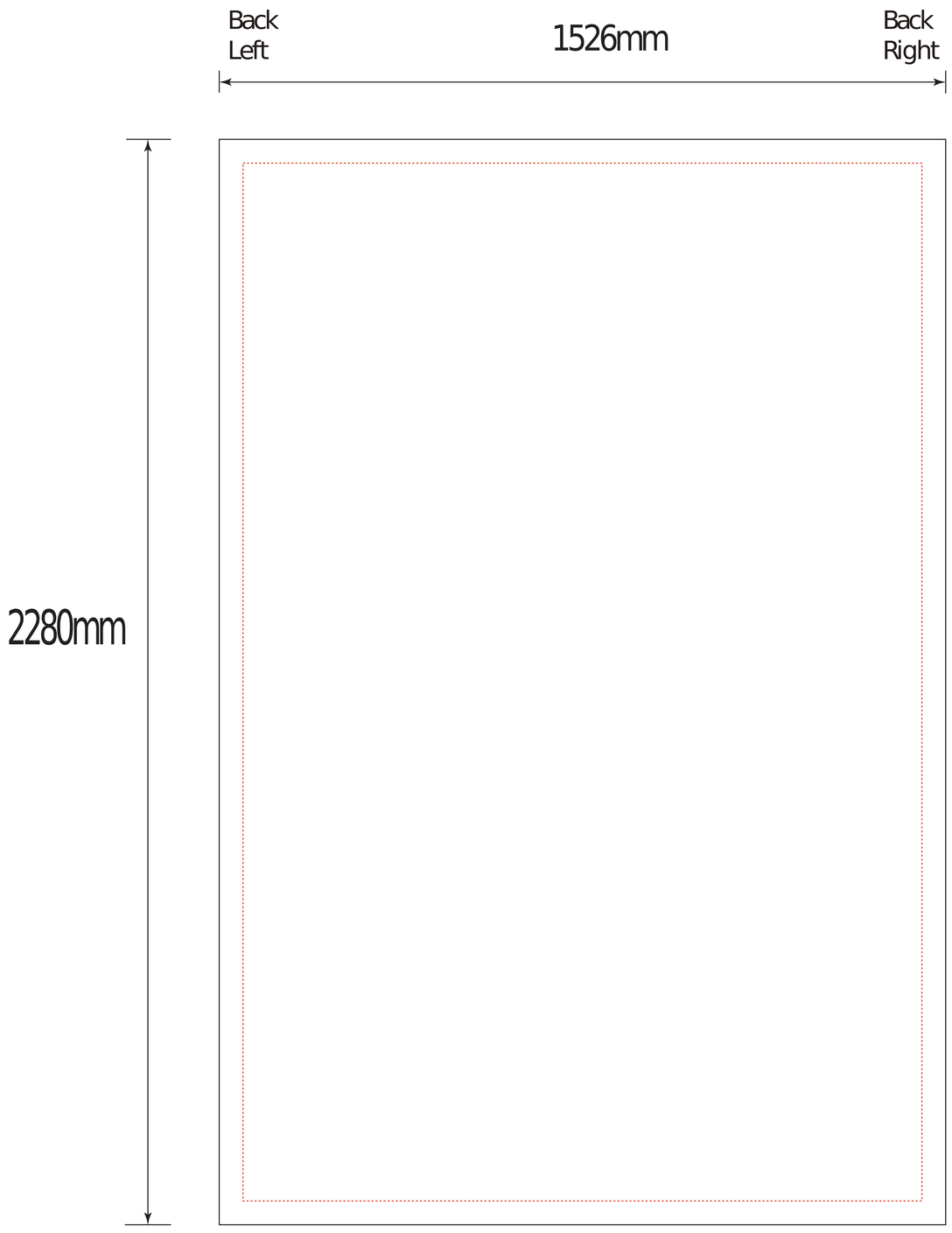
Back
Left
1526mm
Back
Right
2280mm